Inclinometer - SST300 series

VARIOHM EUROSENSOR

- Highest combined absolute accuracy ±0.01°@25°C
- Absolute accuracy combined with absolute linearity, cross axis sensitivity, offset, repeatability, hysteresis
- Cross-axis sensitivity ≤±0.1%FS
- Offset ≤±0.005°
- Precise installation & higher actual accuracy
- Adjustable vibration suppression while running
- Temperature drift accuracy (optional): ±0.05°@-40~+85°C
- Various output interfaces
- EMC certified

The SST300 inclinometer is an excellent tilt device which not only features outstanding performance, but also provides simulation & process with advanced EDA&CAE technologies. Its high reliability design was developed with strict process control, structure integrity, components/materials collection, heat treatment, heat flow analysis, finite element analysis and so on - to achieve high reliability and stability.

Each inclinometer is tested with patented automatic technologies without manual operations to counter unpredictable random errors. Testing covers not only general accuracy, but also temperature drift compensation, nonlinear correction, cross-axis sensitivity error correction, and/or orthogonal error correction, input-axis misalignment compensation and vertical-axis misalignment compensation - in addition to series life tests.

Applications

- Vessel
- Precision instruments
- Security detection
- Civil engineering
- Military project
- Platform leveling
- Drilling machines
- Hydraulic leveling

Reference Standards

- GB/T 191 SJ 20873 General requirements for Inclinometer & levelmeter (China)
- GBT 18459 Methods for Calculating the Main static performance specifications for transducers (China)
- JJF 1059 Evaluation and Express of Uncertainty in Measurement(China)
- JJF 1094 Evaluation of the Characteristics of Measuring Instruments(China)
- JJF 1116 Calibration Specification for Linear Accelerometer for use with precision Centrifuge (China)
- QJ 2318 The test method of gyro & accelerometer(China)
- GJB 2786A General Requirements for Military Software Development(China)
- GJB 2884 General Specification for Thre=Axis angular motion simulator (China)
- EN61000-4-11 Voltage dips & Voltage variations
- MIL-HDBD-338B
- ISO 5348 IDT
- MIL-STD-810F-501.4
- MIL-STD-810F-502.4
- MIL-STD-810F-503.4
- MIL-STD-810F-506.4
- MIL-STD-810F-510.4
- MIL-STD-810F-514.5
- MIL-STD-810F-516.5
- IEC60529 IP
- EN61000 -4-2 ESD
- EN61000-4-3 RS
- MIL-STD-810F-507.4
- EN61000-4-4 EFT
- EN61000-4-5 SURGE
- EN61000-4-6 CS
- EN61000-4-8 PFMF
- ISTA-2A

Specification:

Measurement range		±5°	±10°	±15°	±30°	±45°	±60°
Combined absolute accuracy[1](@25°C)		±0.01°	±0.015°	±0.02°	±0.04°	±0.06°	±0.08°
Accuracy subroutine parameter	Absolute linearity (LSF,%FS)	±0.06	±0.03	±0.03	±0.03	±0.02	±0.02
	Cross-axis sensitivity[2]	±0.1%FS					
	Offset[3]	±0.005°				±0.008°	
	Repeatability	±0.0025°					
	Hysterisis	±0.0025°					
Allowed installation misalignment[4]		±4.0°	±3.0°	±2.5°	±1.5°	±1.2°	±1.2°
Input-axis mislignment		≤±0.1°					
Sensitivity temperature drift coefficient (max.)		≤100 ppm/°C	≤50ppm/°C				
Offset temperature drift coefficient (max.)		≤0.003°/°C					
Offset turn on repeatability[5]		±0.008°					

VARIOHM HOLDINGS

Inclinometer - SST300 series

VARIOHM EUROSENSOR

Specification cont.:

Measurement range	±5°	±10°	±15°	±30°	±45°	±60°
Resolution	0.0025°					
Long-term stability[6] (1 year)	≤0.02°					
Measurement axis	1 or 2 axis					
Temperature sensor	Range: -50~125°C,Accuracy:±1°C					
Output	RS232 (optional 25 types, please refer to accessories)					
RS232 data format	115200 baud, 8 data bits, 1 start bit, 1 stop bit, none parity,ASCII					
Cold start warming time	60s					
Response time[7]	0.3s(@t_{90})					
Refresh rate(digital output)	5Hz(optional 10Hz,20Hz)					
Response frequency[8] (analog output)	3Hz @-3dB					
Power supply	9 ... 36 VDC					
Power consumption	Average working current≤50mA, average power≤1.5W (25°C &24VDC)					
Operation temperature range	-40~85°C					
Storage temperature range	-60~100°C					
EMC	According to EN 61000					
Insulation resistance	100MΩ					
MTBF	≥25000 h/times					
Shock	100g@11ms,three-axis, half- sine					
Vibration	8grms, 20~2000Hz					
Protection	IP67					
Connector	Military class connector (MIL-C-26482)					
Weight	420g(without connector and cable)					

Notes:

1. Combined absolute accuracy means the compositive value of sensor's absolute linearity, repeatability, hysteresis, offset and cross-axis sensitivity error. (in room temperature condition) as:

$$\Delta = \pm\sqrt{\text{absolute linearity}^2 + \text{repeatability}^2 + \text{hysterisis}^2 + \text{cross-axis sensitivity errror}^2}$$

2. The cross-axis sensitivity means the angle that the tilt sensor may be banked to the normal tilt direction of sensor. The cross-axis sensitivity (±0.1%FS) shows how much perpendicular acceleration or inclination is coupled to the inclinometer output signal. For example, for the single-axis inclinometer with range ±30°(assuming the X-axis as measured tilt direction), when there is a 10° tilt angle perpendicular to the X-axis direction(the actual measuring angle is no change, example as +8.505°), the output signal will generate additional error for this 10° tilt angle, this error is called as cross-axis sensitivity error. SST300`s cross-axis sensitivity is 0.1%FS, the extra error is 0.1%×30°=0.03°(max), then real output angle should be +(8.505°±0.03°). In SST300 series, this error has been combined into the absolute accuracy
3. Offset means that when no angle input (such as the inclinometer is placed on an absolute level platform), output of sensor is not equal to zero,the actual output value is zero offset value.
4. Allowed installation misalignment means during the installation, the allowable installation angle deviation between actual tilt direction and sensor's nature measure ment direction. In general, when installed,SST300 sensor is required that the measured tilt direction keep parallel or coincident with sensor designated edge, this parameter can be allowed a certain deviation when sensor is installed and does not affect the measurement accuracy.
5. Offset turn on repeatability means the repeatability of the sensor in repeated by supply power on-off-on many times.
6. Long-term stability means the deviation between the statistics of the maximum and the minimum output value after a year of continuous power supply when the sensor is at 20°C .
7. The response time refers to the angle sensor in a step change (such as the angle changes from -10° to +10° within 5ms), the time required that output of the sensor achieved to the standard value of 90%. The index is different from the sensor set-up time
8. Response frequency is for the limitation of the dynamic measurement range, when the dynamic measurement exceeds 3 Hz, because of centripetal force, the output occupied additional random error, this error is difficult to define.

Inclinometer - SST300 series

Dimensions (mm)

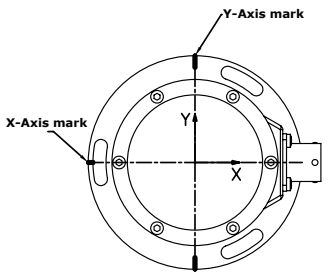

Axial figure

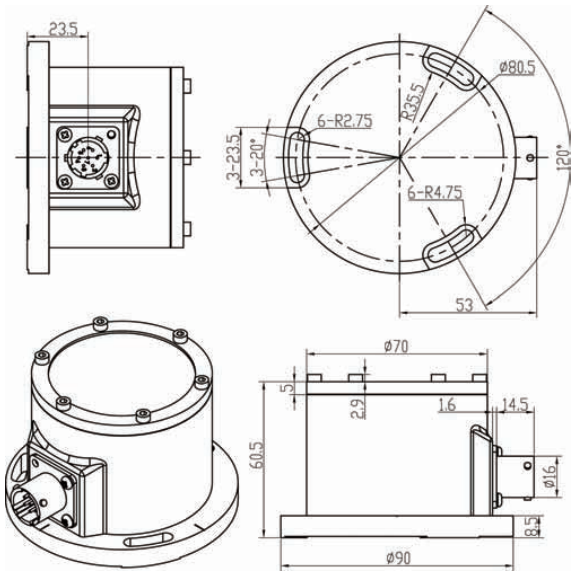

Housing with MIL class connector

Wiring

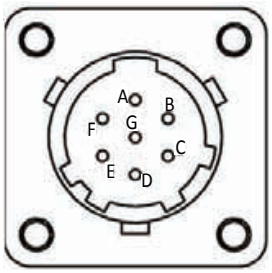

MIL connector socket (View from outside)

Pin	Signal (RS232)
A	Power+
B	Power -
C	Signal GND
D	NC
E	NC
F	RS232--TXD
G	RS232--RXD

Ordering Information

(Please use the characters in the chart below to contruct your product code)

Sample Code: SST3 01 - 05 - 00 - 00 - 00 - 00 - 00

Axis	Range	Output	Function	Housing	Cable/plg	Temp. drift
Single axis — 01 Dual axis — 02	±5°—05 ±10°—10 ±15°—15 ±30°—30 ±45°—45 ±60°—60	RS232 —00 Other:G1~G25 See Accessories and Options	Standard — 00 Other:F1~F5 See Accessories and Options	Standard — 00 Other:B1~B6 See Accessories and Options	None — 00 Other:C1~C8 See Accessories and Options	25°C — 00 Other:D1~D10 See Accessories and Options

For example, if ordering a dual-axis inclinometer, with range ±15°, Output Zigbee Wi-Fi transmission, two meters cable with plug, vibration suppression function and anti-explosion housing, the model should be chosen as: SST302-15-G8-F5-B5-C1.

Meanwhile some options (See Accessories and Options):
4 channels hub — order number SST003-05-06
Fixed installation base — order number SST003-01-05
Zigbee LCD display with lithium battery —order number SST003-04-07
Complementary power combined with solar and wind energy — order number SST003-09-03
Field calibration equipment (accuracy ±30") — order number SST003-10-02

Inclinometer - SST300 series

Accessories

Item	Order Code	Accessories name	Function
Output interface	G1	RS485 output	Standard industrial ModBus protocol, can be connected to PLC
	G4	CAN open output	Standard industrial interface, can be connected to PLC
	G19	4~20mA output	Standard industrial level
Cable/Plug	C1	Standard cable with plug	Military class connector(meet MIL-C-26482),Standard 2M able,IP67 protection, heavy duty up to 30kg
	C6	Standard plug	According to MIL-C-26482,IP67 protection
Temperature drift	D1	Temperature drift	Temperature compensation range 0~60ºC,and temperature drift accuracy ±0.01º@≤±30º
	D2	Temperature drift	Temperature compensation range 0~60ºC,and temperature drift accuracy ±0.01º@>±30º
	D3	Temperature drift	Temperature compensation range -20~60ºC,and temperature drift accuracy ±0.02º@≤±30º
	D4	Temperature drift	Temperature compensation range -20~60ºC,and temperature drift accuracy ±0.02º@>±30º
	D5	Temperature drift	Temperature compensation range -30~60ºC,and temperature drift accuracy ±0.03º@≤±30º
	D6	Temperature drift	Temperature compensation range -30~60ºC,and temperature drift accuracy ±0.03º@>±30º
	D7	Temperature drift	Temperature compensation range -40~65ºC,and temperature drift accuracy ±0.05º@≤±30º
	D8	Temperature drift	Temperature compensation range -40~65ºC,and temperature drift accuracy ±0.05º@>±30º
	D9	Temperature drift	Temperature compensation range -40~85ºC,and temperature drift accuracy ±0.05º@≤±30º
	D10	Temperature drift	Temperature compensation range -40~85ºC,and temperature drift accuracy ±0.05º@>±30º

Options

Item	P/N	Option name	Function
Installation tools	SST003-01-01	Magnetic base	50kg suction, permanent magnet, stainless steel materials
	SST003-01-02	Adjustable base	Three-points adjustment, range ±3º, stainless steel materials
	SST003-01-03	Adjustable base with bubble	Three-points adjustment, range ±3º, bubble accuracy is ±20“, stainless steel materials
	SST003-01-04	Adjustable base with micrometer screw	Three-points adjustment, resolution 0.001mm, stainless steel materials
	SST003-01-05	Fixed installation base	Three-points adjustment, stainless steel materials
	SST003-01-06	Alignment block	Positioning sensor’s X\Y axis to align with actual tilt direction

Variohm EuroSensor - Williams‘ Barn - Tiffield Road -Towcester - Northants -NN12 6HP - UK
sales@variohm.com • www.variohm.com • +44 (0) 1327 351004

Subject to change without notice